EcoStruxure™
Innovation At Every Level

Pact series

EvoPact LF

Medium Voltage Distribution

Catalog 2022

SF_6 Circuit breaker up to 17.5 kV

se.com

Life Is On | Schneider Electric

Same technology, same offer, simpler names

We're making it easier for you to navigate across the wide range of our world-class digital products and select the offers that are right for you and your needs with confidence.

EcoStruxure Architecture

To enable brand consistency, relevance and impact, we are reinforcing our EcoStruxure™ architecture and digital customer lifecycle tools to help ensure a seamless experience from the CAPEX to OPEX phases of each project, bridging our entire ecosystem of partners, services providers and end users.

EcoStruxure is our IoT-enabled open and interoperable system architecture and platform. EcoStruxure delivers enhanced values around safety, reliability, efficiency, sustainability and connectivity for our customers. EcoStruxure leverages advancements in IoT, mobility, sensing, cloud, analytics, and cybersecurity technologies to deliver Innovation At Every Level from Connected Products, Edge Control, Apps, and Analytics & Services: our IoT technology Levels.

Old names	New names
Ecodial	EcoStruxure Power Design
Ecoreal	EcoStruxure Power Build
Ecoreach	EcoStruxure Power Commission
MasterPact MTZ mobile App/Easergy mobile App	EcoStruxure Power Device App

Pact and **Set** Series

Featuring outstanding medium-voltage (MV) and low-voltage (LV) switchboards, motor control centers and power distribution solutions for high-performance power applications, Schneider Electric's Pact and Set Series are best-in-class solutions based on high levels of safety and an optimized footprint. Built on a modular architecture and incorporating smart connected devices for maximum safety, reliability, performance and energy efficiency, the Set Series is delivered to customers directly from our Schneider Electric plants or via a global network of licensed partner panel builders, who are trained and audited to provide quality equipment and support.

Old names	New names
HVX	EvoPact HVX
LF	EvoPact LF
SF	EvoPact SF
Premset	PremSet
Compact	ComPact
Masterpact	MasterPact
Transferpact	TransferPact
Fupact	FuPact

Your needs

EvoPact LF answers

Continuity of service

- Low level of SF_6 pressure
- A safety membrane which, in very rare cases of an internal arc, will open in order to let the gas flow to the back of the circuit breaker
- Keeping at 0 bar of SF_6:
  - The nominal performance
  - The capacity to break once at least 80 % of the full breaking capacity
  - The capacity to withstand at least 80 % of the insulating level
- Breaking all types of current without overvoltages

Proven technology

- Long experience of Schneider Electric in manufacturing MV circuit breakers in SF_6 technology
- 100,000 EvoPact LF Circuit Breakers installed with over 20 years of experience

Ease of installation

- Compact dimensions
- Cassette version : retrofit and new panels integration


PM104629

General Contents

General Presentation

Content

The advantages of proven technology

Schneider Electric has developed a wide range of high performance and reliable devices operating faultlessly on all 5 continents.

Continuously increasing its performance, the company maintains a very high level of innovation in its offer.

Key Benefits

- Compact and simple design
- No overvoltage during breaking
- Comprehensive range
- Soft breaking whitout chopping currents
- Continuous monitoring of the gas pressure inside poles

Safety

The breaking medium is sulfur hexafluoride (SF_6) used at low pressure.
The insulating enclosure containing the circuit breaker pole(s) is equipped with a safety membrane.
In addition, the rated characteristics, breaking the rated current under the rated voltage, are generally maintained at zero relative bars of SF_6.

Reliability

The motor-charged spring stored energy operating mechanism is a key factor of device reliability: Schneider Electric cumulates 45 years' experience with this type of mechanism, 1,200,000 of which are already in operation.
Schneider Electric's mastery of design and the testing of sealed systems guarantees sustained device performance for at least 30 years.

Increased endurance

The mechanical and electrical endurance of Schneider Electric SF_6 breaking devices are in conformity with the most demanding specifications recommended by the IEC.
These devices therefore meet requirements for even the most exposed of networks.

Environmentally-friendly

Schneider Electric devices have been designed to ensure protection of the environment:

- the materials used, both insulating and conductive, are identified and easy to separate and recycle,
- the SF_6 gas is under control from production through to the circuit-breaker's end of life. In particular it can be recovered at the end of the circuit-breaker's life and re-used after treatment in line with the new European directive,
- an end of life manual for the product details procedures for dismantling and recycling components.

Quality Assurance

During production, each circuit breaker undergoes systematic routine tests in order to check quality and conformity:

- pole sealing check
- checking the correct mechanical operation of the device, plus its associated locking mechanisms
- checking simultaneous closing of contacts
- checking power frequency insulation level
- checking main circuit resistance
- checking auxiliary circuit insulation
- checking switching speeds
- checking the switching cycle
- measuring the switching times.

The results are recorded on the test certificate for each device which is initiated by the quality control department.

Certification

PE58256

afaq ISO 9001 Qualité AFNOR CERTIFICATION

The quality system for the design and production of EvoPact LF range is certified in conformity with ISO 9001: 2008 quality assurance standard requirements.

The environmental management system adopted by Schneider Electric production sites for the production of EvoPact LF range has been assessed and judged to be in conformity with requirements in standard ISO 14001.

Breaking principle

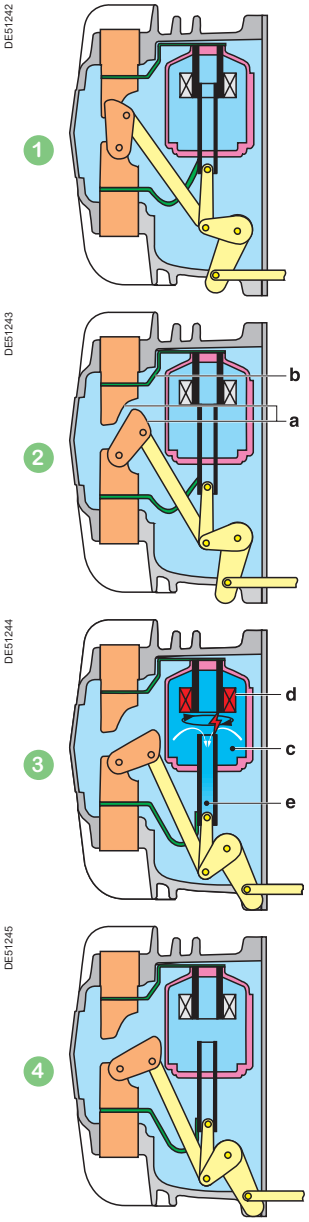

Breaking principle: self expansion

EvoPact LF circuit breakers use the SF_6 gas self expansion technique.
This technique is the result of many years' experience in SF6 technology and major research work.
It combines the effect of thermal expansion with a rotating arc to create arc blowing and quenching conditions.
The result is reduced control energy requirements and arcing contact erosion; this increases mechanical and electrical endurance.
The operating sequence of a self-expansion breaking chamber, whose moving part is driven by the mechanical operating mechanism, is as follows:

1

The circuit breaker is closed

2

On opening of the main contacts (a) the current is shunted into the breaking circuit (b)

3

On separation of the arcing contacts, an electrical arc appears in the expansion volume (c).

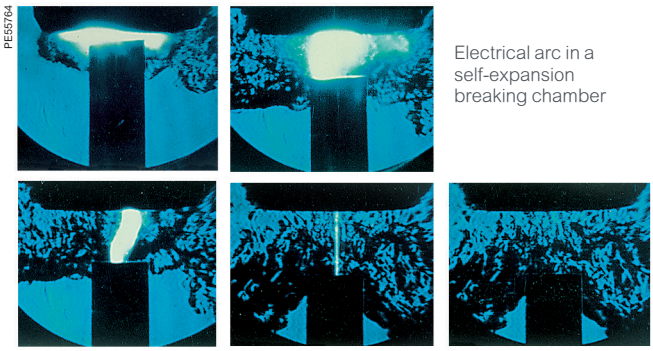

Electrical arc in a self-expansion breaking chamber

The arc rotates under the effect of the magnetic field created by the coil (d) through which flows the current to be broken:

- the overpressure created by the temperature build-up of the gas in the expansion volume (c) causes a gaseous flow blowing the arc inside the tubular arcing contact (e)
- resulting in arc quenching when the current passes through the zero point

4

The circuit breaker is open

Scope of application and some references

Our EvoPact LF Circuit Breaker adapts to all electrical power distribution requirements up to 17.5 kV.

Applications

EvoPact LF circuit breakers are three-pole indoor MV circuit breakers.
They are mainly used for operation and protection of public, industrial and tertiary distribution networks from 7.2 to 17.5 kV.

Through their anti-seismic qualification, they are particularly well suited to nuclear or thermal power production installations and applications in heavy industries such as the petrochemical industry.
Through their compact dimensions and harmonized range, EvoPact LF circuit breakers are positioned very favorably on the retrofit market.

EvoPact LF Circuit breaker is a component integrated in MV switchgear used in power distribution to protect and control cables, transformer and MV substations, motors, capacitors banks, etc.

SF_6 Self expansion breaking technique use in EvoPact LF circuit breaker makes all current types, capacitive and inductive, without generating operating overvoltage that could damage the installation.

Therefore, it is greatly appropriate for the retrofit and upgrading of old installations.

A two thresholds pressure switch in standard to monitor the gas pressure (0.1 MPa, 0,05 MPa / 1 bar, 0,5 bar).

SF_6 Circuit Breaker is an essential component of an indoor metal-enclosed device intended for the MV section of HV/MV substations and high power MV/MV substations.

- SF_6 Circuit Breaker offers you:
  - pre-engineered and adaptable solutions tailored to your specific requirements
  - significantly reduced maintenance
  - local support centres throughout the world

- EvoPact LF Circuit Breaker gives you the advantages of:
  - continuity of service for your networks;
  - enhanced safety for your staff and operations
  - optimised investment throughout the life of your installation
  - the possibility of integrating your medium voltage switchboard in a monitoring and control system

EvoPact LF Circuit breaker is present in all power distribution markets

Energy
- Electric power stations (thermal, nuclear)
- Auxiliary substations
- Source substations

Industry
- Oil & gas
- Chemical industry
- Paper mills
- Metallurgy
- Car industry
- Mining
- Cement plants…

Infrastructure
- Airports
- Ports
- Hospitals
- Water treatment…

Marine and Navy applications
- Cruisers
- Container ships
- Tankers
- Offshore platforms, fixed and mobile
- LNG (Liquid Natural Gas)
- Navy…

Scope of application and some references

(cont.)

Marine

Jan de Nul	Belgium (MCset)
Zhen Hua Port Machinery	China (MCset)
FREMM	France (MCset)
Conti Rederei	Germany (MCset)
MSC	Italy (MCset)
M.O.L.	Japan (MCset)
STX Shipyard	Korea (MCset)
CPOC	Malaya (MCset)
Subsea	Norway (MCset)
Sovcomflot	Russia (MCset)
TMT	Taiwan (MCset)
British Gas	United Kingdom (MCset)
Norvegian Cruise Lines	USA (MCset)

Industry

Algérienne des eaux	Algeria (MCset)
Water treatment, Degremont	Argentina (MCset)
Alcoa Aluminium	Australia (MCset)
Croesus Mining	Australia (MCset)
Rollestone Coal Pty LTD	Australia (MCset)
Ciment Karadag	Azerbaijan (MCset)
Volvo	Belgium (MCset)
Cement Lafarge	Equator - Turkey (MCset)
Cement Lafarge	France (MCset)
Ford	Germany (MCset)
Irak Traitement des eaux	Irak
Arab Union Contracting Company	Libya (MCset)
Arcelor	Luxemburg (MCset)
Opel	Russia (MCset)
Ciment Bastas	Turkey (MCset)

Power generation

Sonelgaz	Algeria (MCset)
Moranbah Generation Facility	Australia (MCset)
China Nuclear Power programmes	China (MCset)
CEA Cadarache	France (MCset)
Enertherm	France (MCset)
Wind Turbines	France (MCset)
La Termica	Italy (MCset)
Al Fanar Electrical System	KSA (MCset)
Skagerak Nett AS	Norway (MCset)
EVN thermal power station	Vietnam (MCset)

Oil and Gas

Girassol Mpg-Elf	Angola (MCset)
ONAL	Gabon (MCset)
Alya Co	Kazakhstan (MCset)
Tengiz Chevroil JV	Kazakhstan (MCset)
Occidental Mukhaizna LLC	Oman (MCset)
Qatar Petroleum	Qatar (MCset)
Repsol, Santander	Spain (MCset)
Syrian Gas Company	Syria (MCset)
Turkmengaz	Turkmenistan (MCset)
Abu Dhabi Oil Refining Company	United Arab Emirates (MCset)
Yemen LNG Company	Yemen (MCset)
Yemgas – Technip	Yemen (MCset)

Infrastructure

Italian Railways	Italy (MCset)
Alicante airport	Spain (MCset)
Port of Laem Chabang	Thailand (MCset)

Operating conditions & Standards

PE58251

Operating conditions

Normal operating conditions, according to the IEC International Standards listed below, for indoor switchgear.

- Ambient air temperature:
  - less than or equal to 40°C
  - less than or equal to 35°C on average over 24 hours
  - greater than or equal to – 25 °C
- Altitude:
  - less than or equal to 1000 m;
  - above 1000 m, a derating coefficient is applied (please consult us)
- Atmosphere:
  no dust, smoke or corrosive or infl ammable gas and vapor, or salt
- Humidity:
  - average relative humidity over a 24 hour period ≤ 95%
  - average relative humidity over a 1 month period ≤ 90%
  - average vapor pressure over a 24 hour period ≤ 2.2 kPa
  - average vapor pressure over a 1 month period ≤ 1.8 kPa

Storage conditions
In order to retain all of the functional unit's qualities when stored for prolonged periods, we recommend that the equipment is stored in its original packaging, in dry conditions, and sheltered from the sun and rain at a temperature ranging from - 40°C up to + 70°C.

PM104585

Standards

The EvoPact LF range meets the following international standards:

- IEC 62271-100: High-voltage switchgear and controlgear - Alternating current circuit-breakers
- IEC 62271-1: High-voltage switchgear and controlgear: common specifications
- GOST conformity: R52565 - 2006

EvoPact LF circuit breakers panorama

One range of comprehensive and proven three-pole circuit breaker units for indoor installation using SF_6 technology.

Both compact and dependable, it is ideally suited to the most demanding applications.

PM109986

EvoPact LF circuit breakers fixed version
from 7.2 kV to 17.5 kV

PM109989

EvoPact LF circuit breakers withdrawable version
from 7.2 kV to 17.5 kV

EvoPact LF range circuit breakers	
LF1-LF2-LF3	
DE51158 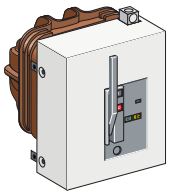 Fixed	DE58508 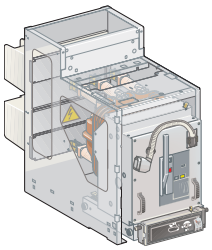 Withdrawable
Rated voltage Ur (kV, 50/60 Hz)	
7.2	12 / 17.5
Rated short-circuit breaking current (Isc)	
from 25 to 50 kA	from 25 to 40 kA
Rated current (Ir)	
from 630 to 3150 A	

EvoPact LF circuit breakers fixed version

Contents

Presentation

PM109988

EvoPact LF1 - LF2 - LF3 circuit breakers

PM109991

EvoPact LF1 - LF2 - LF3 circuit breakers installed on a support frame

Description of the device

The EvoPact LF circuit breaker comprises a basic fixed version:

- 3 poles integrated in a “sealed pressure system” type insulating enclosure. The sealed assembly is filled with SF6 gas at low relative pressure (0.15 MPa/1.5 bars and equipped with a pressure switch
- an RI stored energy electrical operating mechanism. This gives the device an opening and closing speed that is independent of the operator, for both electrical and manual orders. It enables reclosing cycles to be carried out
- a front panel housing the manual operating mechanism and status indicators
- upstream and downstream terminals for the power circuit connection
- a terminal block for connection of external auxiliary circuits.

Each device can also be fitted with the following options:

- a seismic version is available, allowing to withstand the specific parameters of earthquakes and marine applications
- a supporting frame equipped with rollers and ground fixing brackets for fixed installation
- circuit breaker locking in the open position by a keylock installed on the front plate of the operating mechanism
- a 42-pin Harting type LV connector.

General characteristics

Electrical characteristics according to IEC 62271-100				EvoPact LF1				EvoPact LF2				
Rated voltage	Ur	kV 50/60 Hz		7.2		12		7.2		12	17.5	
Insulation voltage												
- power frequency withstand	Ud	kV 50 Hz 1min (*)		20		28		20		28	38	
- lightning impulse withstand	Up	kV peak		60		75		60		75	95	
Rated current	Ir	A	630	■	■	■	■	■	■	■	■	■
			1250	■	■	■	■	■	■	■	■	■
			2000	–	–	–	–	■	■	■	■	■
Short circuit current	Isc	kA		25	31.5	25	31.5	40	50	40	25	31.5
Short time withstand current	Ik/tk	kA/3 s		25	31.5	25	31.5	40	50	40	25	31.5
Short-circuit making current	Ip	kA peak	50 Hz	63	79	63	79	100	125	100	63	79
			60 Hz	65	82	65	82	104	130	104	65	82
Rated switching sequence		O-3 min-CO-3 min-CO		■	■	■	■	■	■	■	■	■
		O-0.3 s-CO-3 min-CO		■	■	■	■	■	■	■	■	■
		O-0.3 s-CO-15 s-CO		■	■	■	■	■	■	■	■	■
Operating times		Opening ms		< 54				< 54				
		Breaking ms		< 70				< 70				
		Closing ms		< 72				< 72				
Service temperature	T	°C		–25 to +40				–25 to +40				
Mechanical endurance		Class		M2				M2				
		Number of switching operations		10 000				10 000				
Electrical endurance		Class		E2				E2				
Capacitive current breaking capacity		Class		C2				C2				

(*) Ud 42 kV 50 Hz, 1 min available in standard

■ Available
– Not available

General characteristics

(cont.)

Electrical characteristics according to IEC 62271-100				EvoPact LF3										
Rated voltage	Ur	kV 50/60 Hz		7.2				12				17.5		
Insulation voltage														
- power frequency withstand	Ud	kV 50 Hz 1min (*)		20				28				38		
- lightning impulse withstand	Up	kV peak		60				75				95		
Rated current	Ir	A	630	–	–	–	–	–	–	–	–	–	–	–
			1250	–	–	–	–	–	–	–	■	–	–	■
			2000	–	–	–	–	–	–	–	–	–	–	–
			2500	■	■	■	■	■	■	■	■	■	■	■
			3150	■	■	■	■	■	■	■	■	■	■	■
Short circuit current	Isc	kA		25	31.5	40	50	25	31.5	40	50	25	31.5	40
Short time withstand current	Ik/tk	kA/3 s		25	31.5	40	50	25	31.5	40	50	25	31.5	40
Short-circuit making current	Ip	kA peak	50 Hz	63	79	100	125	63	79	100	125	63	79	100
			60 Hz	65	82	104	130	65	82	104	130	65	82	104
Rated switching sequence		O-3 min-CO-3 min-CO		■	■	■	■	■	■	■	■	■	■	■
		O-0.3 s-CO-3 min-CO		■	■	■	■	■	■	■	■	■	■	–
		O-0.3 s-CO-15 s-CO		■	■	■	■	■	■	■	■	■	■	–
Operating times		Opening ms		< 54										
		Breaking ms		< 70										
		Closing ms		< 72										
Service temperature	T	°C		–25 to +40										
Mechanical endurance		Class		M2										
		Number of switching operations		10 000										
Electrical endurance		Class		E2										
Capacitive current breaking capacity		Class		C2										

(*) Ud 42 kV 50 Hz, 1 min available in standard

■ Available
– Not available

Specific applications

Protection of generators and power station auxiliaries

All circuit breakers in the EvoPact LF range break short circuit currents with an asymmetry of at least 30%.
In cases where the network constant L/R is greater than 45 ms, the asymmetry to be broken is higher; this is often the case of circuit breakers protecting nuclear or thermal power station auxiliaries or circuit breakers that are close to generator sets or large transformers.
Specific tests have been carried out:

Circuit breakers	kV	kA	Asymmetry
EvoPact LF2	7.2	43.5	50%
EvoPact LF3	7.2	43.5	50%
	12	40	50%
	17.5	25	100%

Switching and protection of capacitor banks

EvoPact LF range circuit breakers are particularly well suited to switching and protection of capacitor banks; they are classed C2 according to standard IEC 62271-100.
Tests carried out according to the standard for breaking at 400 A with making and breaking cycles in case of a capacitor bank with a making current of 20 kA.

Description of functions

RI stored energy operating mechanism
Wiring diagram

PM109995

Operation of the RI stored energy operating mechanism

This mechanism guarantees the device an opening and closing speed unaffected by the operator, for both electric and manual orders.
It carries out the O and CO cycles and is automatically recharged by a gear motor after closing. It consists of:

- the stored energy operating mechanism which stores in springs the energy required to open and close the device
- a gear motor electrical charging device with manual charging by lever (useful on loss of auxiliary supply)
- manual order devices by push buttons on the front panel of the device (red and black)
- an electrical remote closing device containing a release with an antipumping relay
- an electrical opening device containing one or more releases, for example:
  - shunt trip devices
  - Mitop, a low consumption release, used only with the self protection relay.
- an operation counter
- a position indication device by mechanical indicator (black and white) and a module of 14 auxiliary contacts whose availability varies according to the diagram used
- a device for indicating “charged” operating mechanism status by mechanical indicator and electrical contact
- A two thresholds pressure switch allows to monitor the gas pressure (0.1 MPa, 0,05 MPa / 1 bar, 0,5 bar, relative pressure)

Wiring diagram

DE58511EN

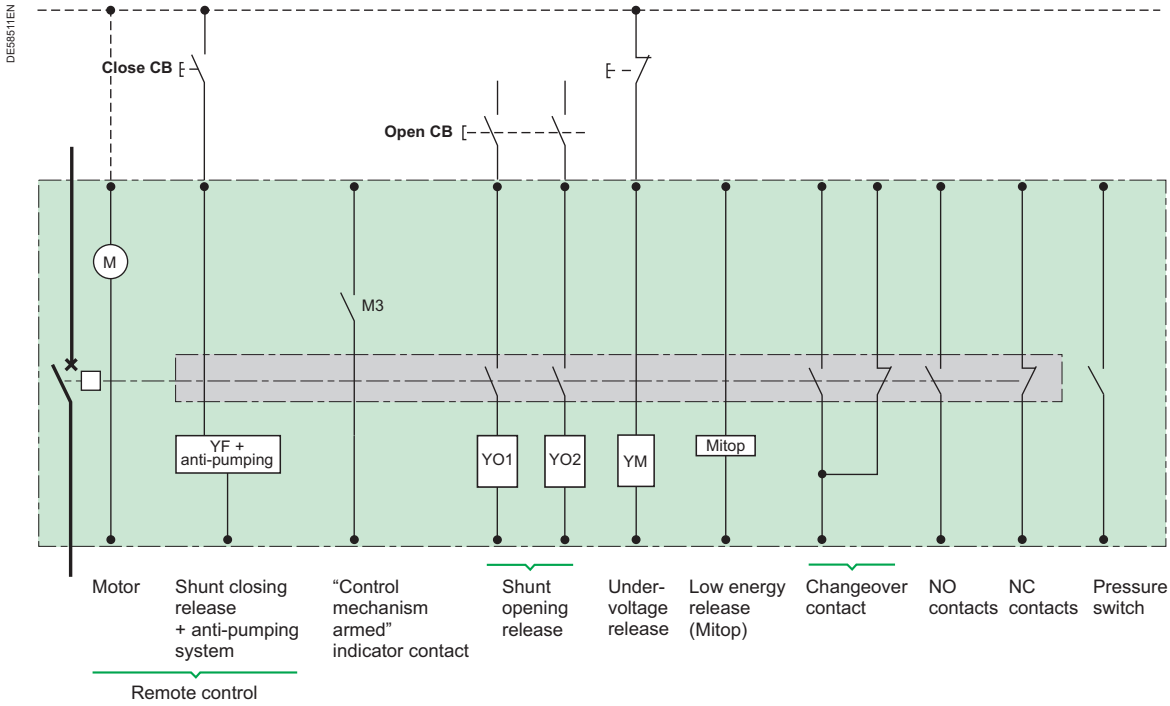

Description of functions

Opening circuit

DE57612EN

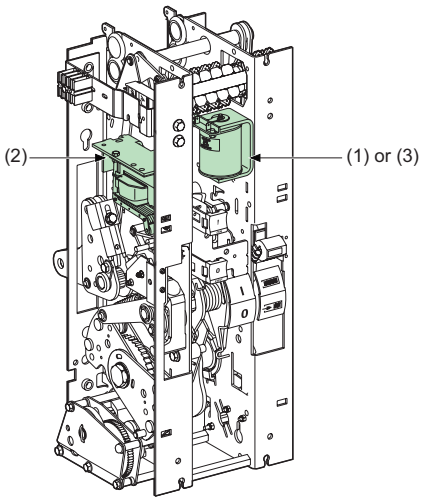

Operating mechanism

DE58092

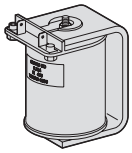

Shunt opening release (1)

DE58093

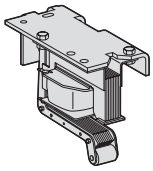

Undervoltage release (2)

DE58094

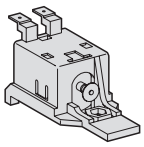

Low energy release (3)

Composition

The opening circuit can be produced using the following components:

- shunt opening release (on energizing) (YO1)
- second shunt opening release (on energizing) (YO2)
- undervoltage release (YM)
- low energy release (Mitop).

Note: see the table of the releases' combinations "Order form" page.

Shunt opening release (YO1 and YO2)

Energizing this unit causes instant opening of the circuit breaker.

Characteristics		
Power supply	See "Order form" page	
Threshold	V AC	0.85 to 1.1 Ur
	V DC	0.7 to 1.1 Ur
Consumption	V AC	160 VA
	V DC	50 W

As an option, the tripping circuit monitoring (supervision) enables to ensure that the Circuit breaker is ready to open.

Undervoltage release (YM)

This release unit causes the systematic opening of the circuit breaker when its supply voltage drops below a value less than 35% of the rated voltage, even if this drop is slow and gradual. It can open the circuit breaker between 35% and 70% of its rated voltage. If the release unit is not supplied power, manual or electrical closing of the circuit breaker is impossible. Closing of the circuit breaker is compulsory when the supply voltage of the release unit reaches 85% of its rated voltage.

Characteristics			
Power supply		See "Order form" page	
Threshold		Opening	0.35 to 0.7 Ur
		Closing	0.85 Ur
Consumption	Triggering	V AC	400 VA
		V DC	100 W
	Latched	V AC	100 VA
		V DC	10 W

Low energy release (Mitop)

This specific release unit comprises a low consumption unit and is specifically used with self-powered relays. The Circuit-breaker's opening time must be adjusted with the relay to a minimum value of 45ms.

Characteristics	
Power supply	Direct current
Threshold	0.6 A < I < 3 A

Any tripping due to the Mitop release unit is momentarily indicated by an SDE type changeover contact.

Description of functions

Remote control

DE57604

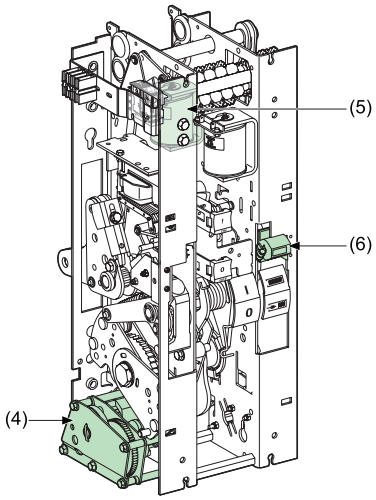

Operating mechanism

DE58096

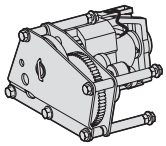

Electrical motor with gearing (4)

DE58092

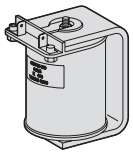

Shunt closing release (5)

DE58097

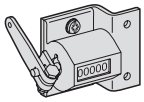

Operation counter (6)

Function

Remote control enables the remote opening and closing of the circuit breaker.

Composition

The remote control mechanism comprises:
- an electrical motor with gearing
- a shunt closing release (YF) combined with an anti-pumping device
- an operation counter.

Electrical motor with gearing (M)

The electrical motor arms and re-arms the stored energy unit as soon as the circuit breaker is closed. This allows the instant closing of the device after opening.
The arming lever is only used as a back-up operating mechanism in the case of any auxiliary power supply.
The M3 contact indicates the end of arming operations.

Characteristics		
Power supply	See “Order form” page	
Threshold	V AC/V DC	0.85 to 1.1 Ur
Consumption	V AC	380 VA
	V DC	380 W

Shunt closing release (YF)

This allows the remote closing of the circuit breaker when the operating mechanism is armed.

Characteristics		
Power supply	See “Order form” page	
Threshold	V AC	0.85 to 1.1 Ur
	V DC	0.85 to 1.1 Ur
Consumption	V AC	160 VA
	V DC	50 W

The anti-pumping relay enables the guaranteeing of opening priority in the case of a permanent closing order. This therefore avoids the device being caught in a uncontrolled opening-closing loop.

Operation counter

The operation counter is visible on the front panel.
It displays the number of switching cycles (CO) that the device has carried out.

Description of functions

Indication and locking/interlocking

DE57491

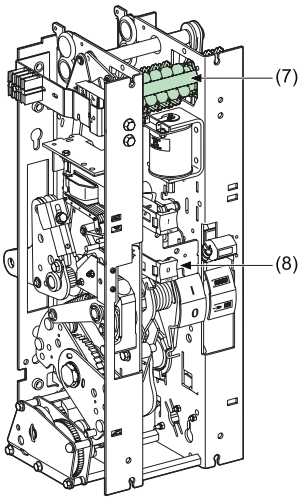

Operating mechanism

DM103526

Auxiliary contacts (7)

DE58099

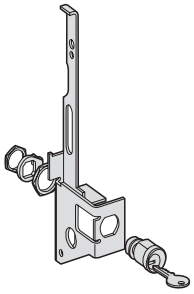

Keylocking kit (8)

“Open/closed” auxiliary contacts

The number of contacts available depends on the options chosen on the operating mechanism.
In the basic configuration, the circuit breaker’s operating mechanism comprises a total of:

- 6 normally closed contacts (NC)
- 7 normally open contacts (NO)
- 1 changeover contact (CHG).

The usage procedure for auxiliary contacts is given in the following table:

Options		
	NC contact	**NO contact**
Remote control	1	1
Shunt opening release (each one) YO1/YO2	0	1
Undervoltage release YM	0	0
Low energy release (Mitop)	0	0

In order to know the final number of available contacts, you must deduct the total number of contacts included in the circuit breaker (6 NC + 7 NO + 1 CHG), the number of contacts used given in the table above.
E.g.: a circuit breaker equipped with a remote control and a shunt trip unit has the following available contacts:
6 NC + 5 NO + 1 CHG.
With a undervoltage release instead of the shunt trip, this circuit breaker would have the following available contacts:
6 NC + 6 NO + 1 CHG.

Shunt opening release combination			
1st release / **2nd release**	**Shunt opening release YO1**	**Undervoltage release YM**	**Mitop**
Without	6NC + 5NO + 1CHG	6NC + 6NO + 1CHG	6NC + 6NO + 1CHG
Shunt opening release YO2	6NC + 4NO + 1CHG		
Undervoltage release YM	6NC + 5NO + 1CHG		
Mitop	6NC + 5NO + 1CHG	6NC + 6NO + 1CHG	

Locking the circuit breaker in the “open” position

This key-operated device allows the circuit breaker to be locked in the “open” position.
The circuit breaker is locked in the open position by blocking the opening push button in the “engaged” position.
Locking is achieved using a Profalux or Ronis captive key type keylock.

Dimensions

EvoPact LF1, LF2, LF3 circuit breakers

Device

Fixed version

EvoPact	LF1	LF2	LF3
A	493	554	728
Weight (kg) *	115	134	197

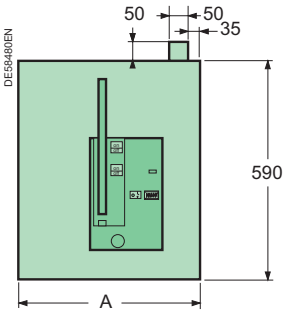

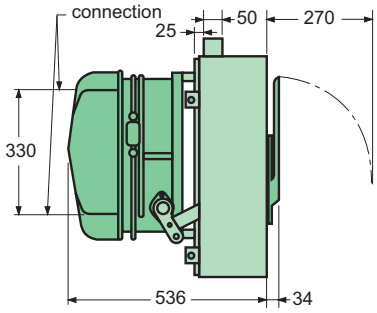

Fixed version with support frame (to be ordered separately)

EvoPact	LF1	LF2	LF3
B	542	602	776
Weight (kg) *	135	154	217

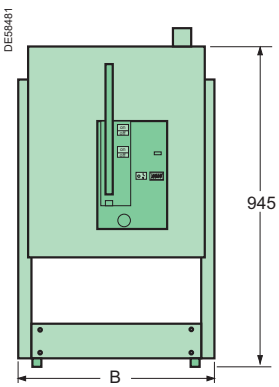

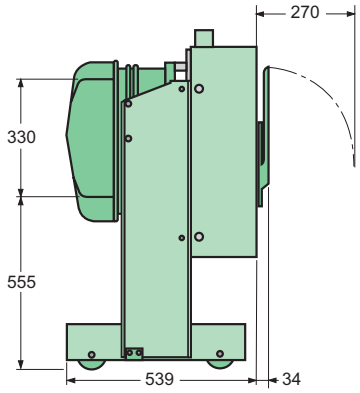

*Maximum values, depending on ratings and options

Connections

Direct to the device

- EvoPact LF1
- EvoPact LF2 < 2000 A < 95 kV impulse
- EvoPact LF3 < 2500 A and < 95 kV impulse

Connection on pads

- EvoPact LF2:
  - 2000 A
  - 1250 A/95 kV impulse
  - 630 A/95 kV impulse
- EvoPact LF3:
  1250 A/95 kV impulse
- EvoPact LF3:
  - 2500 A/95 kV impulse
  - 3150 A/95 kV impulse

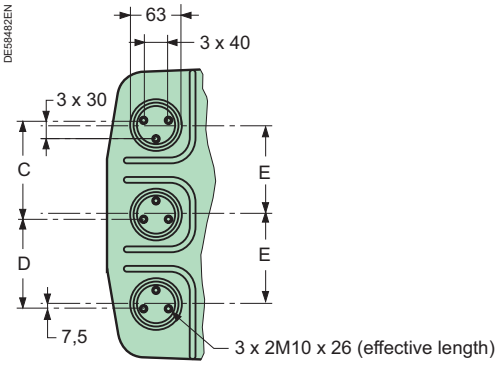

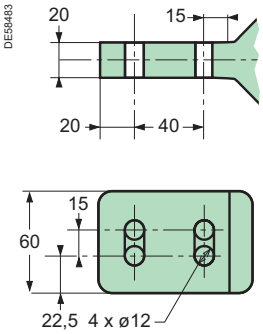

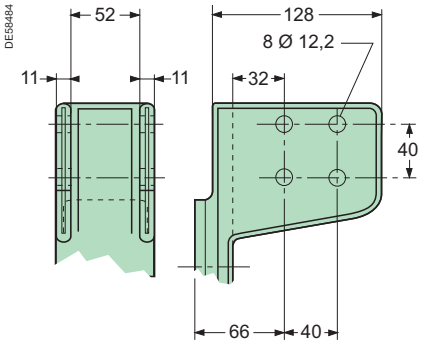

EvoPact	LF1	LF2	LF3
C	160	180	240
D	145	165	225
E	145	165	225

Note:
■ recommended connection screw M10 class 8.8.
Tightening torque: 50 Nm with contact washer.
■ connectors delivered mounted on the device
■ for more details refer to the dimensional drawings

EvoPact LF circuit breakers withdrawable version

Contents

Presentation

PM109989

EvoPact LF withdrawable circuit breaker and MC cassette

Description of the device

The basic withdrawable version of the EvoPact LF circuit breaker comprises:

- the circuit breaker unit with its operating mechanism:
  - 3 poles integrated in a “sealed pressure system” type insulating enclosure.
    The sealed assembly is filled with SF6 gas at low relative pressure (0.15 MPa/1.5 bars) and equipped with a pressure switch
  - an RI stored energy electrical operating mechanism.
    This gives the device an opening and closing speed that is independent of the operator, for both electrical and manual orders. It enables reclosing cycles to be carried out
  - a front panel housing the manual operating mechanism and status indicators.
- the components enabling it to be withdrawable:
  - the circuit breaker is equipped with racking arms and contact fingers and mounted on a racking in/out drive device with a threaded shaft activated by a handle, including all of the safety interlock systems.
  - a Harting type male LV connector allows connection of the external auxiliary circuits

Each device can optionally be fitted with:

- locking of the circuit breaker in the following positions:
  - racked out, by a key lock installed on the drive device for disconnecting truck
- the basic MC cassette, comprising:
  - a metal structure and two guide rails
  - fixed connection fingers insulated by bushings
  - metal shutters to insulate from the HV part
  - safety interlocking systems
  - a female Harting type LV connector.
- MC cassette options:
  - circuit breaker racked-in or out position indicator contacts
  - a circuit breaker operating mechanism spring discharge system
  - a circuit breaker racked-in blocking mechanism
  - an extraction tool
  - an equipped door
  - a foolproof device for the circuit breaker rating
  - an earthing switch operating mechanism
    (see chapter 5 in catalogue “MV switchboards components” ref. AMTED305019EN).

General characteristics

Electrical characteristics according to IEC 62271-100				Circuit breaker LF1 / Cassette MC1			
Rated voltage	Ur	kV 50/60 Hz		7.2		12	
Insulation voltage							
- power frequency withstand	Ud	kV 50 Hz 1min (*)		20		28	
- lightning impulse withstand	Up	kV peak		60		75	
Rated current	Ir	A	630	■	■	■	■
			1250	■	■	■	■
Short circuit current	Isc	kA		25	31.5	25	31.5
Short time withstand current	Ik/tk	kA/3 s, kA/1 s		25	31.5	25	31.5
Short-circuit making current	Ip	kA peak	50 Hz	63	79	63	79
			60 Hz	65	82	65	82
Rated switching sequence		O-3 min-CO-3 min-CO		■	■	■	■
		O-0.3 s-CO-3 min-CO		■	■	■	■
		O-0.3 s-CO-15 s-CO		■	■	■	■
Operating times		Opening ms		< 54			
		Breaking ms		< 70			
		Closing ms		< 72			
Service temperature	T	°C		–25 to +40			
Mechanical endurance		Class		M2			
		Number of switching operations		10 000			
Electrical endurance		Class		E2			
Capacitive current breaking capacity		Class		C2			

(*) Ud 42 kV 50 Hz, 1 min available in standard

Specific applications

Protection of generators and power station auxiliaries

All circuit breakers in the EvoPact LF range break short circuit currents with an asymmetry of at least 30%.
In cases where the network constant L/R is greater than 45 ms, the asymmetry to be broken is higher; this is often the case of circuit breakers protecting nuclear or thermal power station auxiliaries or circuit breakers that are close to generator sets or large transformers.
Specific tests have been carried out:

Circuit breakers	kV	kA	Asymmetry
EvoPact LF2	7.2	43.5	50%
EvoPact LF3	7.2	43.5	50%
	12	40	50%
	17.5	25	100%

Switching and protection of capacitor banks

EvoPact LF range circuit breakers are particularly well suited to switching and protection of capacitor banks; they are classed C2 according to standard IEC 62271-100.
Tests carried out according to the standard for breaking at 400 A with making and breaking cycles in case of a capacitor bank with a making current of 20 kA.

General characteristics

(cont.)

Electrical characteristics according to IEC 62271-100				Circuit breaker LF2 / Cassette MC2								
Rated voltage	Ur	kV 50/60 Hz		7.2				12			17.5	
Insulation voltage												
- power frequency withstand	Ud	kV 50 Hz 1min (*)		20				28			38	
- lightning impulse withstand	Up	kV peak		60				75			95	
Rated current	Ir	A	630	–	–	■	■(**)	–	–	■	■	■
			1250	■	■	■	■(**)	–	–	■	■	■
			1600	■	■	■	■(**)	■	■	■	■	■
Short circuit current	Isc	kA		25	31.5	40	50	25	31.5	40	25	31.5
Short time withstand current	Ik/tk	kA/3 s, kA/1 s		25	31.5	40	50 (**)	25	31.5	40	25	31.5
Short-circuit making current	Ip	kA peak	50 Hz	63	79	100	125	63	79	100	63	79
			60 Hz	65	82	104	130	65	82	104	65	82
Rated switching sequence		O-3 min-CO-3 min-CO		■	■	■	■	■	■	■	■	■
		O-0.3 s-CO-3 min-CO		■	■	■	■	■	■	■	■	■
		O-0.3 s-CO-15 s-CO		■	■	■	■	■	■	■	■	■
Operating times		Opening ms		< 54								
		Breaking ms		< 70								
		Closing ms		< 72								
Service temperature	T	°C		–25 to +40								
Mechanical endurance		Class		M2								
		Number of switching operations		10 000								
Electrical endurance		Class		E2								
Capacitive current breaking capacity		Class		C2								

(*) Ud 42 kV 50 Hz, 1 min available in standard
(**) Rated short-circuit breaking duration (tk): 1 s

■ Available
– Not available

Electrical characteristics according to IEC 62271-100				Circuit breaker LF3 / Cassette MC3										
Rated voltage	Ur	kV 50/60 Hz		7.2				12				17.5		
Insulation voltage														
- power frequency withstand	Ud	kV 50 Hz 1min (*)		20				28				38		
- lightning impulse withstand	Up	kV peak		60				75				95		
Rated current	Ir	A	630	–	–	–	–	–	–	–	–	–	–	–
			1250	–	–	–	–	–	–	–	■(**)	–	–	■
			1600	–	–	–	–	–	–	–	–	–	–	–
			2500	■	■	■	■	■	■	■	■	■	■	■
			3150	■	■	■	■	■	■	■	■	■	■	■
Short circuit current	Isc	kA		25	31.5	40	50	25	31.5	40	50	25	31.5	40
Short time withstand current	Ik/tk	kA/3 s, kA/1 s		25	31.5	40	50	25	31.5	40	50	25	31.5	40
Short-circuit making current	Ip	kA peak	50 Hz	63	79	100	125	63	79	100	125	63	79	100
			60 Hz	65	82	104	130	65	82	104	130	65	82	104
Rated switching sequence		O-3 min-CO-3 min-CO		■	■	■	■	■	■	■	■	■	■	■
		O-0.3 s-CO-3 min-CO		■	■	■	■	■	■	■	■	■	■	–
		O-0.3 s-CO-15 s-CO		■	■	■	■	■	■	■	■	■	■	–
Operating times		Opening ms		< 54										
		Breaking ms		< 70										
		Closing ms		< 72										
Service temperature	T	°C		–25 to +40										
Mechanical endurance		Class		M2										
		Number of switching operations		10 000										
Electrical endurance		Class		E2										
Capacitive current breaking capacity		Class		C2										

(*) Ud 42 kV 50 Hz, 1 min available in standard
(**) Rated short-circuit breaking duration (tk): 1 s

■ Available
– Not available

Description of functions

Racking in

DE52495

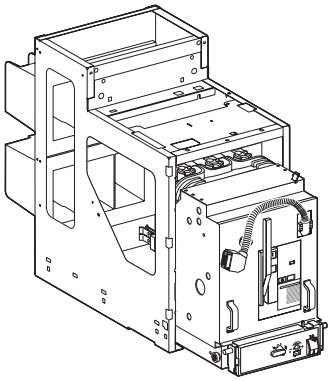

DE58490

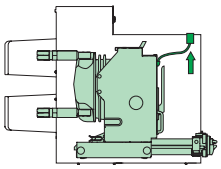

Operation position

DE58491

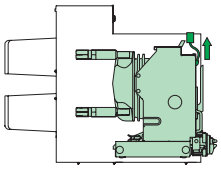

Test position

DE58492

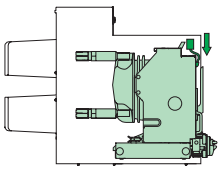

Disconnected position

DE58493

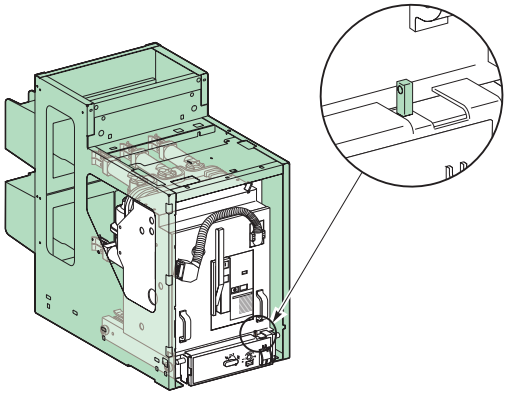

Interlocking door-cubicle

Assembly components

The “racking-in/out” function is achieved by:
- the withdrawable circuit breaker with its LV connector (mobile part)
- the cassette with its bushings (fixed part).

Circuit breaker operation

The withdrawable circuit breaker can be placed in 3 stable positions:
- **service position:** circuit breaker racked in and locked in position; LV plugs connected
- **test position:** circuit breaker racked out and locked in position; LV plug connected
- **disconnected position:** circuit breaker extracted and locked in this position, LV plug disconnected.

Circuit breaker safety functions

A drive system using a threaded shaft gives easier racking and unracking.

Test position contact
This is activated when the circuit breaker is in the “test” or “service” position.

Earthing is achieved throughout the operation via the racking carriage casters. An addition earthing system can be supplied as an option.

Interlocking mechanisms
In conformity with IEC standards 62271-100 and 62271-200, the following interlocks are available:
- impossibility of racking in or out is the circuit breaker is not in the “open” position
- impossible to rack in the circuit breaker when the LV plug is not connected
- impossible to disconnect the LV plug if the circuit b reaker is not racked-out.

Cubicle door interlocking mechanism (MC cassette door only)
The carriage is equipped with a device that enables interlocking between the racking out of the circuit breaker and the cubicle door:
- possible to rack in the circuit breaker only if the door is closed
- possible to open the door only if the circuit breaker is racked out.

This device must be disabled if the interlocking function is not present.

Description of functions

Racking in (cont.)

DE58494

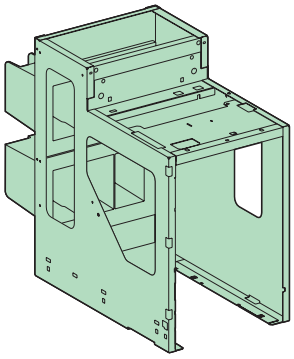

DE58495

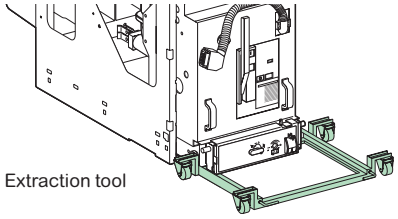

Extraction tool

DE58496

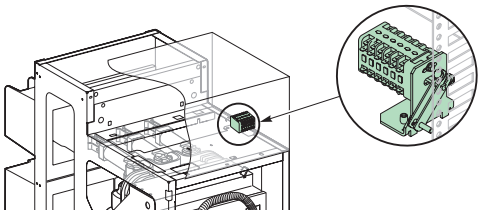

Drawn in/out contacts

DE58497

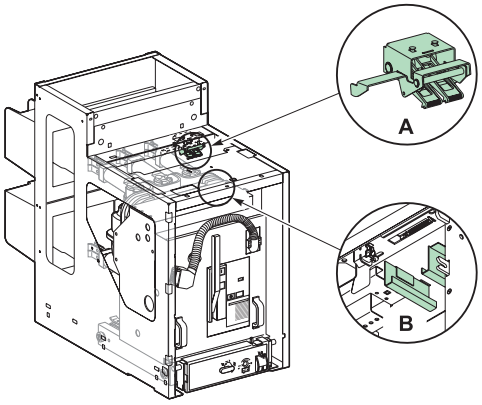

(A) 50 kA fixing latch
(B) circuit breaker operating mechanism spring discharge system

DE58498

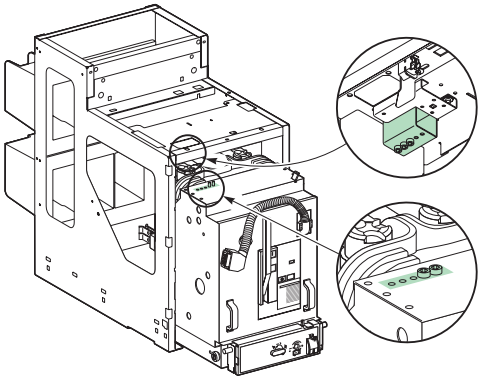

Cassette/circuit breaker foolproofing device

MC cassette safety functions

The MC cassette is designed to receive the EvoPact LF circuit breaker and comprises the following components ensuring safety when racking-in (see details in the Installation Guide ref. 07897536EN).

Metal structure with two guide rails
The rails guide the EvoPact LF circuit breaker during racking-in/out operations.

Fixed connection fingers insulated by bushings
The three ends of the circuit breaker, fitted with racking clusters, provide the contact with these three fingers.

Metal shutters to insulate from the MV part
Three shutters mounted on the structure stop access to the racking fingers when the circuit breaker is extracted (protection index: IP2X).

Safety interlocking systems
When carrying out maintenance operations, it is possible to:
- padlock the shutters in the closed position
- unlock the access mechanism to the fixed contacts.

Anti-drop function
This function ensures operator safety during circuit breaker extraction.

Compulsory MC cassette accessories

Female Harting low voltage connector
A connector with a cable can either be delivered with the circuit breaker or separately.

Panel with circuit breaker operation pictograms
A self-adhesive panel shows racking-in and out operations for the circuit breaker. This is systematically delivered when the circuit breaker is ordered either with the cassette or as a separate order.

Racking handle
The handle is used for circuit breaker racking-in/out operations and for earthing switch opening and closing operations.

Extraction tool
A standard tool allows the breaking device to be extracted from each cassette version, whatever the installation height, up to 800 mm from the ground.
- A simplified extraction tool can be manufactured locally according to the installation height.

50 kA fixing latch
This upper lock enabling the circuit breaker to be held in the cassette in the case of a fault, is compulsory for EvoPact LF2/EvoPact LF3 circuit breakers with 40 and 50 kA withstand.

MC cassette options

Circuit breaker racked-in or racked-out position indicator contacts
12 contacts (6 NO + 6 NC)

Circuit breaker operating mechanism spring discharge system
Circuit breaker operating mechanism springs are automatically discharged when it is extracted from the cubicle. This function avoids any risk of unwanted circuit breaker closing.

Mechanical circuit breaker racked-in lock
This option is included when the earthing switch is installed. However, it can be delivered separately if the earthing circuit breaker is not required: it takes the space and volume of the earthing switch operating mechanism.

Equipped MV access door
Possibility of delivering a fully equipped, available with or without the manual circuit breaker closing mechanism.

Foolproofing device
This enables foolproofing of the circuit breaker rating relative to the cassette rating. This system is mounted on the cassette side. The corresponding combining of the right circuit breaker rating must be carried out by the panel builder.

Earthing switch operating mechanism
This can be mounted under the cassette, for suitable interlocking between the circuit breaker and the earthing switch.
(see details in the «installation guide» 07897490EN)

Description of functions

Connection

MV connection

The customer connection is easily made at the rear of the cassette on the connection terminals integrated in the bushings
(see drilling details in the “Installation Guide” ref. 07897536EN).

DE58499

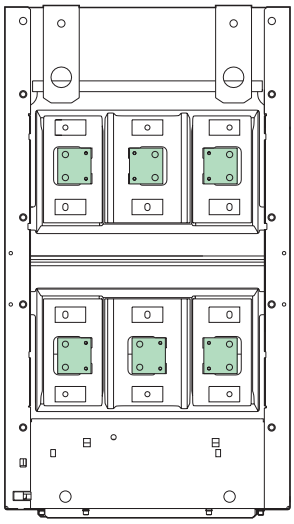

LV connection

With the withdrawable circuit breaker, the LV cabling has an LV connector with:

- a mobile part (male Harting connector) at the end of a flexible cable, fully connected to the operating mechanism terminal by a sleeve
- a fixed part (female Harting connector) compatible with the male part mounted at the top, inside the cassette.

Interlocking function

In conformity with IEC standard 62271-200, an interlocking function prohibits:

- racking in when the LV plug is not connected
- disconnection of the LV plug if the circuit breaker is in the racked-in position.

DE58500

LV plug connection

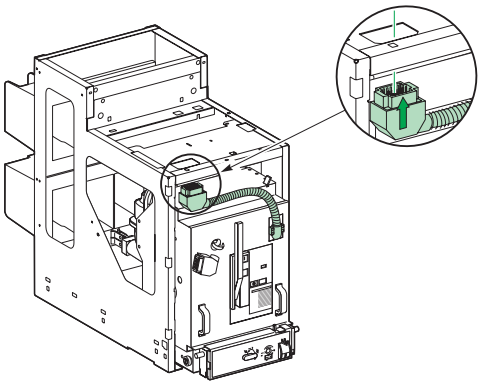

Description of functions

RI stored energy operating mechanism Wiring diagram

PM109995

Operation of the RI stored energy operating mechanism

This mechanism guarantees the device an opening and closing speed unaffected by the operator, for both electric and manual orders.
It carries out the O and CO cycles and is automatically recharged by a gear motor after closing. It consists of:

- the stored energy operating mechanism which stores in springs the energy required to open and close the device
- a gear motor electrical charging device with manual charging by lever (useful on loss of auxiliary supply)
- manual order devices by push buttons on the front panel of the device (red and black)
- an electrical remote closing device containing a release with an antipumping relay
  - an electrical opening device containing one or more releases, for example:
  - shunt trip devices
  - Mitop, a low consumption release, used with self protection relay.
- an operation counter
- a position indication device by mechanical indicator (black and white) and a module of 14 auxiliary contacts whose availability varies according to the diagram used
- a device for indicating “charged” operating mechanism status by mechanical indicator and electrical contact
- A two thresholds pressure switch allows to monitor the gas pressure (0.1 MPa, 0,05 MPa / 1 bar, 0,5 bar, relative pressure)

Wiring diagram

DE58511EN

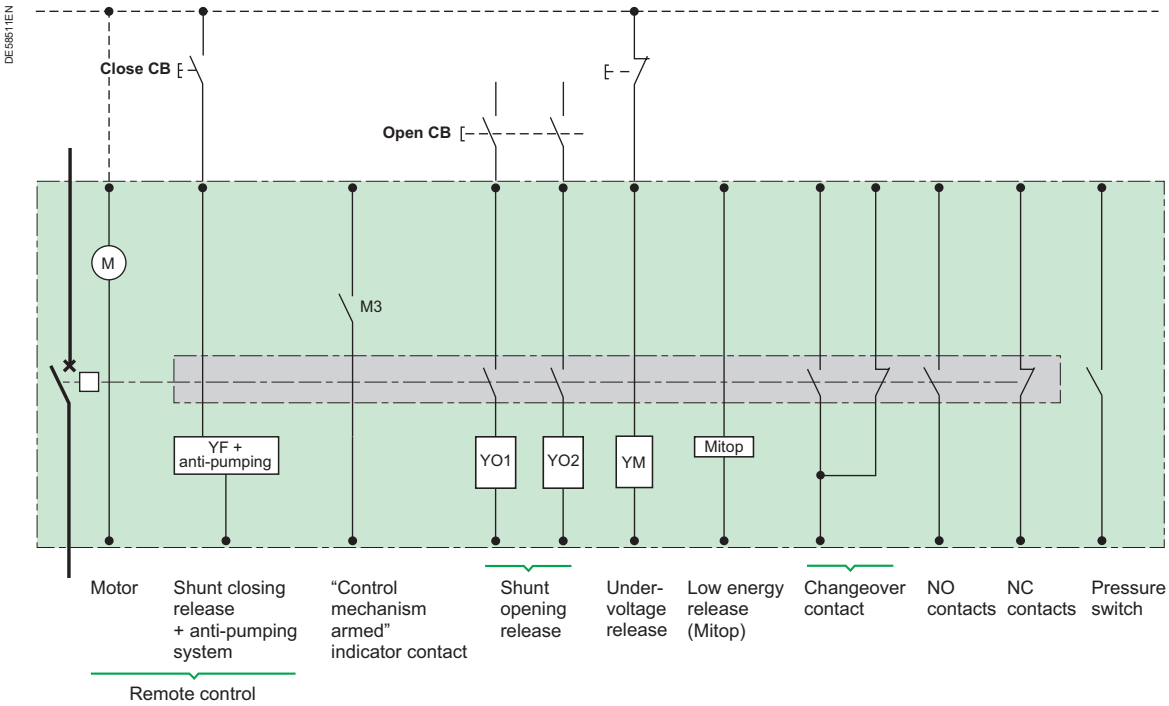

Description of functions

Opening circuit

DE57612EN

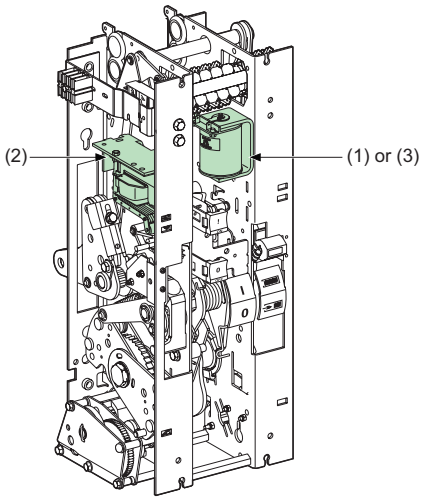

Operating mechanism

DE58092

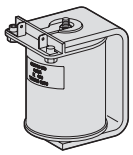

Shunt opening release (1)

DE58093

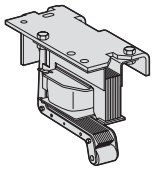

Undervoltage release (2)

DE58094

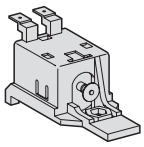

Low energy release (3)

Composition

The opening circuit can be produced using the following components:
- shunt opening release (on energizing) (YO1)
- second shunt opening release (on energizing) (YO2)
- undervoltage release (YM)
- low energy release (Mitop).

Note: see the table of the releases' combinations, "Order form" page.

Shunt opening release (YO1 and YO2)

Energizing this unit causes instant opening of the circuit breaker.

Characteristics		
Power supply	See "Order form" page	
Threshold	V AC	0.85 to 1.1 Ur
	V DC	0.7 to 1.1 Ur
Consumption	V AC	160 VA
	V DC	50 W

Undervoltage release (YM)

This release unit causes the systematic opening of the circuit breaker when its supply voltage drops below a value less than 35% of the rated voltage, even if this drop is slow and gradual. It can open the circuit breaker between 35% and 70% of its rated voltage. If the release unit is not supplied power, manual or electrical closing of the circuit breaker is impossible. Closing of the circuit breaker is possible when the supply voltage of the release unit reaches 85% of its rated voltage.

Characteristics			
Power supply		See "Order form" page	
Threshold		Opening	0.35 to 0.7 Ur
		Closing	0.85 Ur
Consumption	Triggering	V AC	400 VA
		V DC	100 W
	Latched	V AC	100 VA
		V DC	10 W

Low energy release (Mitop)

This specific release unit comprises a low consumption unit and is specifically used for Sepam 100LA self-powered relays. The Circuit-breaker's opening time must be adjusted with the relay to a minimum value of 45ms.

Characteristics	
Power supply	Direct current
Threshold	0.6 A < I < 3 A

Any tripping due to the Mitop release unit is momentarily indicated by an SDE type changeover contact (option).

Description of functions

Remote control

DE57604

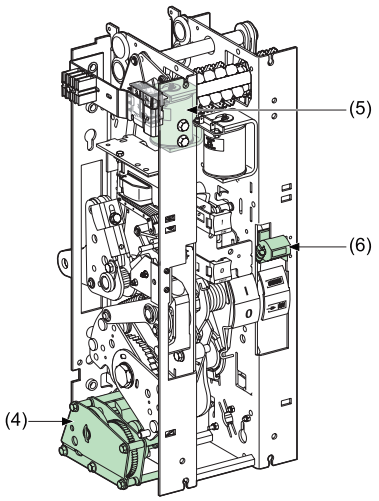

Operating mechanism

DE58096

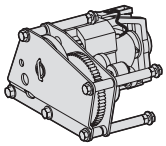

Electrical motor with gearing (4)

DE58092

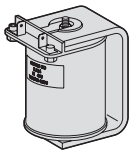

Shunt closing release (5)

DE58097

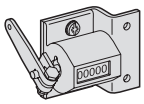

Operation counter (6)

Function

In its basic version, the circuit breaker comprises a remote control mechanism for remote circuit breaker opening and closing.

Composition

The remote control mechanism comprises:

- an electrical motor with gearing
- a shunt closing release (YF) combined with an anti-pumping device
- an operation counter.

Electrical motor with gearing (M)

The electrical motor carries out the automatic rearming of the stored energy unit as soon as the circuit breaker is closed. This allows the instant reclosing of the device after opening. The arming lever is only used as a backup operating mechanism in he case of the absence of the auxiliary power supply.
The M3 contact indicates the end of arming operations.

Characteristics		
Power supply	See “Order form” page	
Threshold	V AC/V DC	0.85 to 1.1 Ur
Consumption	V AC	380 VA
	V DC	380 W

Shunt closing release (YF)

This release allows the remote closing of the circuit breaker when the operating mechanism is armed.

Characteristics		
Power supply	See “Order form” page	
Threshold	V AC	0.85 to 1.1 Ur
	V DC	0.85 to 1.1 Ur
Consumption	V AC	160 VA
	V DC	50 W

The shunt closing release is combined with an anti-pumping relay that enables priority to be given to opening in the case of a permanent closing order.
This thus avoids the device being caught in an uncontrolled opening-closing cycle.

Operation counter

The operation counter is visible on the front panel.
It displays the number of switching cycles (CO) that the device has carried out.

Description of functions

Indication and locking/interlocking

DE57491

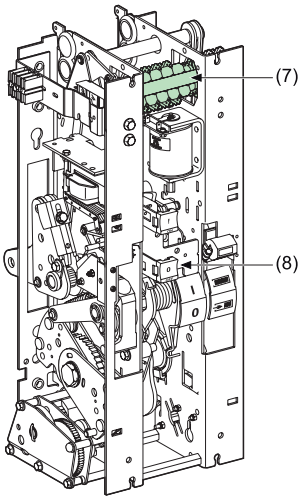

Operating mechanism

DM103526

Auxiliary contacts (7)

"Open/closed" auxiliary contacts

The number of contacts available depends on the options chosen on the operating mechanism.

In the basic configuration, the circuit breaker's operating mechanism comprises a total of:

- 6 normally closed contacts (NC)
- 7 normally open contacts (NO)
- 1 changeover contact (CHG).

The usage procedure for auxiliary contacts is given in the following table:

Options		
	NC contact	**NO contact**
Remote control	1	1
Shunt opening release (each one) YO1/YO2	0	1
Undervoltage release YM	0	0
Low energy release (Mitop)	0	0

In order to know the final number of available contacts, you must deduct the total number of contacts included in the circuit breaker (6 NC + 7 NO + 1 CHG), the number of contacts used given in the table above.
E.g.: a circuit breaker equipped with a remote control and a shunt trip unit has the following available contacts:
6 NC + 5 NO + 1 CHG.
With a undervoltage release instead of the shunt trip, this circuit breaker would have the following available contacts:
6 NC + 6 NO + 1 CHG.

Shunt opening release combination			
1st release / **2nd release**	**Shunt opening release YO1**	**Undervoltage release YM**	**Mitop**
Without	6NC + 5NO + 1CHG	6NC + 6NO + 1CHG	6NC + 6NO + 1CHG
Shunt opening release YO2	6NC + 4NO + 1CHG		
Undervoltage release YM	6NC + 5NO + 1CHG		
Mitop	6NC + 5NO + 1CHG	6NC + 6NO + 1CHG	

Contacts characteristics			
Rated current			10 A
Breaking capacity	AC	220 V (cos $\varphi \geq 0.3$)	1 A
	DC	110/220 V (L/R ≤ 0.02 s)	0.3 A

Description of functions

Safety functions

This table describes the safety functions available on the withdrawable version of the EvoPact LF circuit breaker.

How to use the table
Each of the boxes describes the functional status of each circuit breaker position and the associated parts:

- ☐ Possible status
- ▒ Possible status, impossible operation
- ☒ Impossible status

Parts		Circuit breaker positions					
		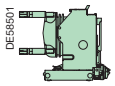	Insertion ⟶ / ⟵ Extraction	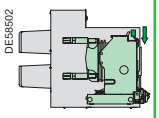	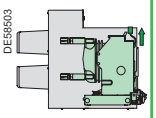	Racking-in ⟶ / ⟵ Racking-out	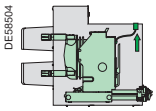
		Removed		Disconnected	Test position		Service
1 - Cradle			Fool-proof protection (1)				
			Anti-drop (2)				
		No opening shutters					
		Shutters padlocking possible					
2 - LV plug	Disconnected			Door closing impossible			
	Connected				No unplugging (5)		
3 - Circuit breaker	Closed		Auto-discharge function (3)		No racking-in		No racking-out
	Open					No closing	
		Open position circuit breaker locking available (3)					
4 - Switchboard door	Open				No racking-in		
	Closed				No door opening (4)		
5 - Earthing switch	Open					No earthing switch closing	
	Closed				No racking-in		

(1) This protection mechanism ensures that the performance levels of the circuit breaker correspond with those of the cassette.
(2) Device that prevents the circuit breaker from dropping when extracted from the cassette.
The device can be either unlocked manually or when the extraction jig is put in position.
(3) Option.
(4) Interlocking device to be fitted to the cubicle door.
(5) Because the door is closed.

Dimensions

EvoPact LF1, LF2, LF3 circuit breakers

Device

Basic withdrawable

C.B./Cassette	LF1/MC1	LF2/MC2	LF3/MC3
L/W	556	686	886
E (phase to phase)	145	185	240
Weight (kg) *	248	297	344 (1250A) 363 (2500A) 445 (3150A)

*Maximum values, depending on ratings and options

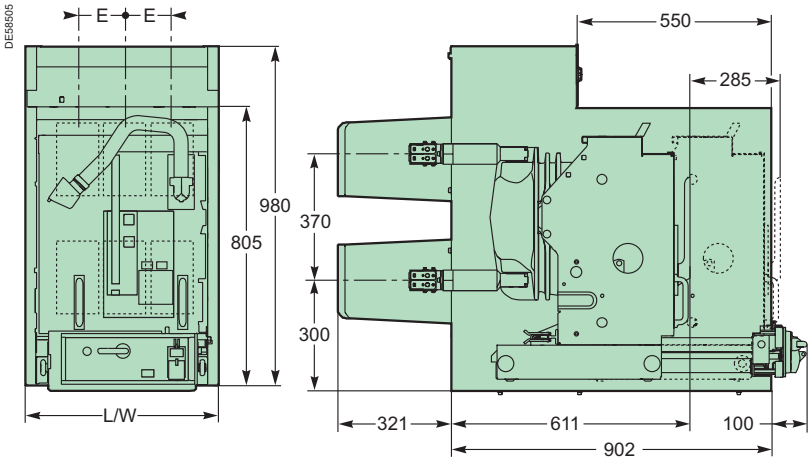

Order Forms

Contents

EvoPact LF1, LF2, LF3 fixed

Order Form

Only one of the boxes (ticked [X] or filled [ ] by the needed value) have to be considered between each horizontal line.

Green box [X] corresponds to none priced functions.

Basic fixed circuit breaker

Quantity [ ]

Rated voltage Ur				**(kV)** [ ]
Impulse voltage Up				**(kVbil)** [ ]
Short-circuit current Isc				**(kA)** [ ]
Rated current Ir				**(A)** [ ]
Frequency	50 Hz [ ]			60 Hz [ ]
Colour for push buttons and indicators	**IEC standard**			**ANSI standard**
Push buttons open/close:	Red/Black [ ]	Red/Green [ ]	Green/Red [ ]	Red/Black [ ]
Indicator open/close:	Black/White [ ]			Green/Red [ ]
Operating mechanism charged/discharged:	White/Yellow [ ]		Charged/Discharged [ ]	

Circuit breaker options

1st opening release (see possible choices in combination table below)

Shunt opening release **YO1**

24 Vdc [ ]	110 Vdc [ ]	48 Vac (50 Hz) [ ]	120 Vac (60 Hz) [ ]
30 Vdc [ ]	125 Vdc [ ]	110 Vac (50 Hz) [ ]	240 Vac (60 Hz) [ ]
48 Vdc [ ]	220 Vdc [ ]	220 Vac (50 Hz) [ ]	

2nd opening release (see possible choices in combination table below)

Shunt opening release **YO2**

24 Vdc [ ]	110 Vdc [ ]	48 Vac (50 Hz) [ ]	120 Vac (60 Hz) [ ]
30 Vdc [ ]	125 Vdc [ ]	110 Vac (50 Hz) [ ]	240 Vac (60 Hz) [ ]
48 Vdc [ ]	220 Vdc [ ]	220 Vac (50 Hz) [ ]	

Undervoltage release **YM**

24 Vdc [ ]	110 Vdc [ ]	48 Vac (50 Hz) [ ]	120 Vac (60 Hz) [ ]
30 Vdc [ ]	125 Vdc [ ]	110 Vac (50 Hz) [ ]	240 Vac (60 Hz) [ ]
48 Vdc [ ]	220 Vdc [ ]	220 Vac (50 Hz) [ ]	

Mitop (not available with seismic version)

Without contact [ ] With contact [ ]

Remote control

Electrical motor **M**

24…32 Vdc [ ]	110…127 Vdc/ac [ ]
48…60 Vdc/ac [ ]	220…250 Vdc/ac [ ]

Shunt closing release **YF**

24 Vdc [ ]	60 Vdc [ ]	220 Vdc [ ]	220 Vac (50 Hz) [ ]
30 Vdc [ ]	110 Vdc [ ]	48 Vac (50 Hz) [ ]	120 Vac (60 Hz) [ ]
48 Vdc [ ]	125 Vdc [ ]	110 Vac (50 Hz) [ ]	240 Vac (60 Hz) [ ]

Low voltage wiring connection	Male plug (1.2 m) [ ]	Female socket (2 m) [ ]
Locking C.B. in open position	Flat [ ]	Tubular [ ]
Seismic version (consult us)		[ ]
Support frame		[ ]
Leaflets language	French [ ]	English [ ]

Different releases combinations

Shunt opening releases YO1/YO2	1			2	1	1	
Undervoltage release YM		1			1		1
Mitop			1			1	1

EvoPact LF1, LF2, LF3 withdrawable

Order Form

Only one of the boxes (ticked [X] or filled [ ] by the needed value) have to be considered between each horizontal line.

Green box [X] corresponds to none priced functions.

Basic withdrawable circuit breaker

				Quantity	
Rated voltage Ur				**(kV)**	
Impulse voltage Up				**(kVbil)**	
Short-circuit current Isc				**(kA)**	
Rated current Ir				**(A)**	
Frequency	50 Hz			60 Hz	
Colour for push buttons and indicators	**IEC standard**			**ANSI standard**	
Push buttons open/close:	Red/Black	Red/green	Green/Red	Red/Black	
Indicator open/close:	Black/White			Green/Red	
Operating mechanism charged/discharged:	White/Yellow			Charged/Discharged	

Circuit breaker options

1st opening release (see possible choices in combination table below)

Shunt opening release **YO1**

24 Vdc	110 Vdc	48 Vac (50 Hz)	120 Vac (60 Hz)
30 Vdc	125 Vdc	110 Vac (50 Hz)	240 Vac (60 Hz)
48 Vdc	220 Vdc	220 Vac (50 Hz)	

2nd opening release (see possible choices in combination table below)

Shunt opening release **YO2**

24 Vdc	110 Vdc	48 Vac (50 Hz)	120 Vac (60 Hz)
30 Vdc	125 Vdc	110 Vac (50 Hz)	240 Vac (60 Hz)
48 Vdc	220 Vdc	220 Vac (50 Hz)	

Undervoltage release **YM**

24 Vdc	110 Vdc	48 Vac (50 Hz)	120 Vac (60 Hz)
30 Vdc	125 Vdc	110 Vac (50 Hz)	240 Vac (60 Hz)
48 Vdc	220 Vdc	220 Vac (50 Hz)	

Mitop (not available with seismic version)

Without contact	With contact

Remote control

Electrical motor **M**

24…32 Vdc	110…127 Vdc/ac
48…60 Vdc/ac	220…250 Vdc/ac

Shunt closing release **YF**

24 Vdc	60 Vdc	220 Vdc	220 Vac (50 Hz)
30 Vdc	110 Vdc	48 Vac (50 Hz)	120 Vac (60 Hz)
48 Vdc	125 Vdc	110 Vac (50 Hz)	240 Vac (60 Hz)

Seismic version (consult us)		
Leaflets language	French	English

MC cassette

MC cassette type	MC1	MC2	MC3
Rated short circuit current Isc		≤ 40 kA	50 kA
Rated current Ir	1250 A	2500 A	3150 A

MC cassette accessories

Racked in/out position contact			6 NO, 6 NC
Pictogram	of the circuit breaker		of the earthing switch
Circuit breaker spring mechanism discharge			
Extraction table			Quantity
Extra handle			Quantity
Door with hinge, windows and pictogram			
	MC1	MC2	MC3

Different releases combinations

Shunt opening releases **YO1/YO2**	1		2	1	1	
Undervoltage release **YM**		1		1		1
Mitop					1	1

Services

Contents

Schneider Electric Services

Peace of mind througout your installation life cycle

Understanding and managing the complexities of your operations

Service Lifecycle Management

Connected switchgear is a foundational element of EcoStruxure, Schneider Electric, open, and interoperable system architecture.
Connectivity offers customers greater visibility of their facilities and more control over operational health.

How to improve site safety

- **Electrical Safety Training**
  - Detect any knowledge gaps and attend appropriate e-learning, practical and hands-on electrical safety training courses.
- **Electrical Distribution Consulting Services**
  - Our consulting services portfolio offers asset health analysis for your site and recommends preventive actions.

How to improve protection your new installation

- **Service Plans**
  - Knowing your installation with the right service plan.
- **Maintenance Services**
  - A complete solution to maintain your equipment. Helping ensure service continuity and peace of mind at every step.

How to modernize aging infrastructure

- **Digitized Modernization**
  - Modernize your electrical distribution switchgear with pre-engineered retrofit service solutions.
- **SF_6 Recovery Services**
  - Peace-of-mind for your transition to SF_6-free medium voltage switchgear.
- **Spare Parts Management**
  - Spare part availability and reduced downtime.

All pictures of the catalogue illustrate the product in an environment close to reality. They were taken off-line. For live operation the P.P.E. (personal protective equipment) must be used in accordance with the regulations of the place of installation.

Find more information here

ProDiag Breaker

Diagnosis of MV and LV Circuit Breakers

PM104628

What is ProDiag Breaker?

ProDiag Breaker is a Schneider Electric diagnosis tool.
ProDiag Breaker compares the mechanical and electrical parameters measured during the full operation of circuit breakers with the data collected from our production facilities. This allows detecting possible failure in advance. It measures, records and displays on a screen the key electrical parameters in MV and LV circuit breakers, relating to opening, closing and springloading operations.
All this data is automatically compared with the criteria for the circuit breaker designated in the software, which indicates which values are within the acceptable range, which are on the limit and which are outside it.
Two tests are always performed on each circuit breakers, one at minimum voltage and one at nominal voltage. A written report is generated and provided by Schneider Electric so that the customer can use it as a tool to define the necessary corrective action (maintenance, repair or replacement).

ProDiag Breaker is part is part of ProDiag preventive maintenance plan
Evaluation of circuit breakers using ProDiag Breaker includes:

- Evaluation of the operating mechanism.
- Measurement and comparison of the actual contact resistance with that specified by the manufacturer.
- Measurement and comparison of the insulation resistance.
- Evaluation of the general circuit breaker conditions based on the captured data.

Moreover, analysis of the ProDiag Breaker time/ travel curve combined with the current curve of the coil and phase contact detects possible faults, such as:

- Worn out latches and operating mechanisms.
- Faulty coils.
- Mechanical wear and tear and hardening of lubricating grease.
- Defective shock absorbers.
- Defective simultaneous contact operation (opening/closing).

Some maintenance programmes involve dismantling the circuit breaker mechanism to check its condition. ProDiag Breaker using signals captured from the circuit breaker operation, reduces maintenance costs compared with programs which check the circuit breakers manually.

ProDiag Breaker Objectives

Your priority is to enhance the reliability of your installation:

- to ensure its continuity of service,
- to minimize the time for maintenance & repair
- to perform maintenance
- Only on the equipment requiring it and only when necessary (conditional preventive maintenance)

Results

ProDiag Breaker provides a report of the complete nature of the circuit breaker, detailing: closing / opening time, contact simultaneity, bounce and resistance, mechanical closing and opening forces.

This report enables any required maintenance to be targeted and time in order to optimize the customer's maintenance plan.

Where can ProDiag Breaker reduce costs?

- ProDiag Breaker significantly reduces the time taken to identify potential faults in a circuit breaker, using operational analysis rather than inspection and mechanical re-sets.
- The software analyses the captured data and identifi es the specifi c problem area.
- A device's normal operating life is increased by timely diagnostics of when and what repairs are necessary.
- The tool comprises both hardware and software, resulting in a highly efficient predictive maintenance program.

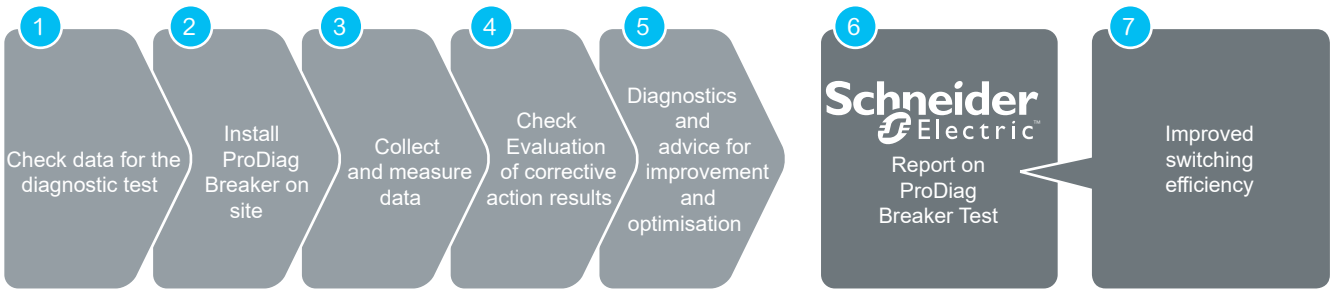

Separated components

The following components can be ordered separately and can be adapted or replaced by the customer.

Auxiliaries

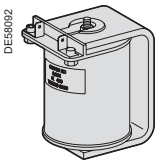
DE58092

Shunt opening release		YO1 or YO2
24 Vdc		889705BL
30 Vdc		889705BL
48 Vdc		889705BJ
60 Vdc		889705BG
110 Vdc		889705BE
125 Vdc		889705BD
220 Vdc		889705BB
48 Vac	50 Hz	SPK0041SF1
110 Vac	50 Hz	889705BL
220 Vac	50 Hz	889705BH
120 Vac	60 Hz	889705BK
240 Vac	60 Hz	889705BH

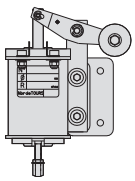
DM103527

Shunt opening release - Seismic version		YO1	YO2
24 Vdc		SPK0003SF	SPK0011SF
30 Vdc		SPK0008SF	SPK0016SF
48 Vdc		SPK0004SF	SPK0012SF
60 Vdc		SPK0021SF	SPK0022SF
110 Vdc		00891486FE	00891487FE
125 Vdc		SPK0005SF	SPK0013SF
220 Vdc		SPK0006SF	SPK0014SF
48 Vac	50 Hz	SPK0007SF	SPK0015SF
110 Vac	50 Hz	SPK0008SF	SPK0016SF
220 Vac	50 Hz	SPK0009SF	SPK0017SF
120 Vac	60 Hz	SPK0010SF	SPK0018SF
240 Vac	60 Hz	SPK0009SF	SPK0017SF

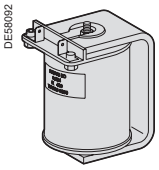
DE58092

Shunt closing release YF		Anti pumping Relay	Closing Release
24 Vdc		MV261207	889705AL
30 Vdc		MV261208	889705AK
48 Vdc		MV261209	889705AH
60 Vdc		MV261210	889705AG
110 Vdc		MV261211	889705AD
125 Vdc		MV261212	889705AD
220 Vdc		MV261213	889705AA
48 Vac	50 Hz	MV261215	889705AP
110 Vac	50 Hz	MV261216	889705AL
220 Vac	50 Hz	MV261218	889705AH
120 Vac	60 Hz	MV261216	889705AL
240 Vac	60 Hz	MV261218	889705AH
Zelio (RXM) relay adaptation kit for RI *		MV261246	

Separated components

(cont.)

Auxiliaries (cont.)

Shunt closing release YF Seismic version			Anti pumping Relay	Closing Release
DM103527 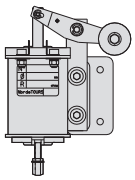	24 Vdc		MV261207	00891485FL
	30 Vdc		MV261208	SPK0019SF
	48 Vdc		MV261209	00891485FH
	60 Vdc		MV261210	SPK0020SF
	110 Vdc		MV261211	SPK0001SF
	125 Vdc		MV261212	SPK0001SF
	220 Vdc		MV261213	00891485FB
	48 Vac	50 Hz	MV261215	SPK0002SF
	110 Vac	50 Hz	MV261216	00891485FL
	220 Vac	50 Hz	MV261218	00891485FH
	120 Vac	60 Hz	MV261216	00891485FL
	240 Vac	60 Hz	MV261218	00891485FH
Zelio (RXM) relay adaptation kit for RI *			MV261246	
Undervoltage release YM				
DE58093 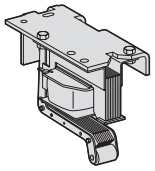	24 Vdc		889772AB	
	30 Vdc		889772AC	
	48 Vdc		889772AE	
	60 Vdc		889772AF	
	110 Vdc		889772AH	
	125 Vdc		889772AJ	
	220 Vdc		889772AM	
	48 Vac	50 Hz	889773AQ	
	110 Vac	50 Hz	889773AU	
	220 Vac	50 Hz	889773AX	
	120 Vac	60 Hz	889773AU	
	240 Vac	60 Hz	889773AX	
Electrical motor & Gear reducer (Ametek) (after 12/1999)				
DE58096 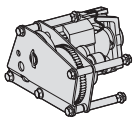	24… 32 Vdc		51072122A1	
	48… 60 Vac/dc		51072122B1	
	110… 127 Vac/dc		51072122C1	
	220… 250 Vac/dc		51072122D1	
End of charging				
DM103528 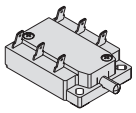	contact M1, M2, M3		AAV85908	
Micro switch SE & SQ				
DM103529 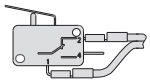	contact SE & SQ		730734A	
Auxiliary contacts				
DM103530 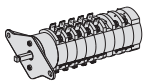	8NO + 8NC (after 2012)		MV261239	

* : to be ordered in case of POK or APE relay type replacement

Separated components

(cont.)

Accessories (fixed version)

Cover		
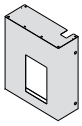 DM103531	EvoPact LF1	00889520FA
	EvoPact LF2	00889520FB
	EvoPact LF3	00889520FC

CB support frame		
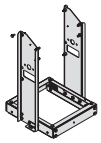 DM103532	EvoPact LF1	00889810FA
	EvoPact LF2	00889810FB
	EvoPact LF3	00889810FC

Locking, interlocking		
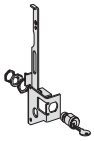 DE58099	Open position circuit-breaker locking (without lock)	888516A
	Flat lock	AAV86887
	Tubular lock	AAV86892

LV connection (fixed version)

Male plug & lead			
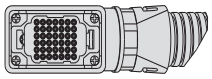 DM103534	EvoPact LF1/EvoPact LF2	L=1,2M	MV261070
	EvoPact LF3	L=1,2M	MV261074

Female plug & lead			
 DM103533	All types	L=2M	MV261071

Accessories (withdrawable version)

Front cover + red push button kits for w/o truck		
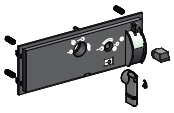 DM103546	All types	MV261241

Notes

How can digital bring more value at work?

Simplify your life at all steps of your business

Connect Panel Builder Portal

The Schneider Electric™ Panel Builder Portal can help you find what you need to create better, more efficient Low Voltage or Medium Voltage Switchboards, in less time.

panel builders web page

You'll get:

- Productivity tools
- Personalized resources
- Collaborative sales support
- Trainings

PM107043

Get support anytime

- 24/7 self-service, mobile catalog and access to expert help
- Off-line and on-line catalog
- Manage and track your orders
- Advanced support

MySchneider App

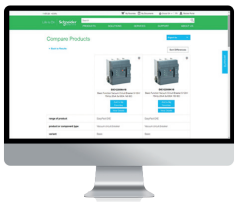

PM107044

Discover, select and define

Experience our advanced WEB functionalities that help to:

- Select and compare components
- Build easily and automatically your technical documentation with ready to use tools

www.se.com

PM108872

Order and check ordering information

A self-service ordering platform to access detailed information:

- Check real-time price and availability information
- Order online
- Check order status and tracking information
- Get financial documentation

mySE

With Schneider Electric Partner Program,

get **more** done!

Think big.
Partner up!

Visit our page and get more:

panel builders web page

DIGITAL TOOLS

se.com

This international web site allows you to access all the Schneider Electric solutions and product information via:

- Comprehensive descriptions
- Range datasheets
- A download area
- Product selectors

You can also access information dedicated to your business and contact your Schneider Electric country support.

PM103687

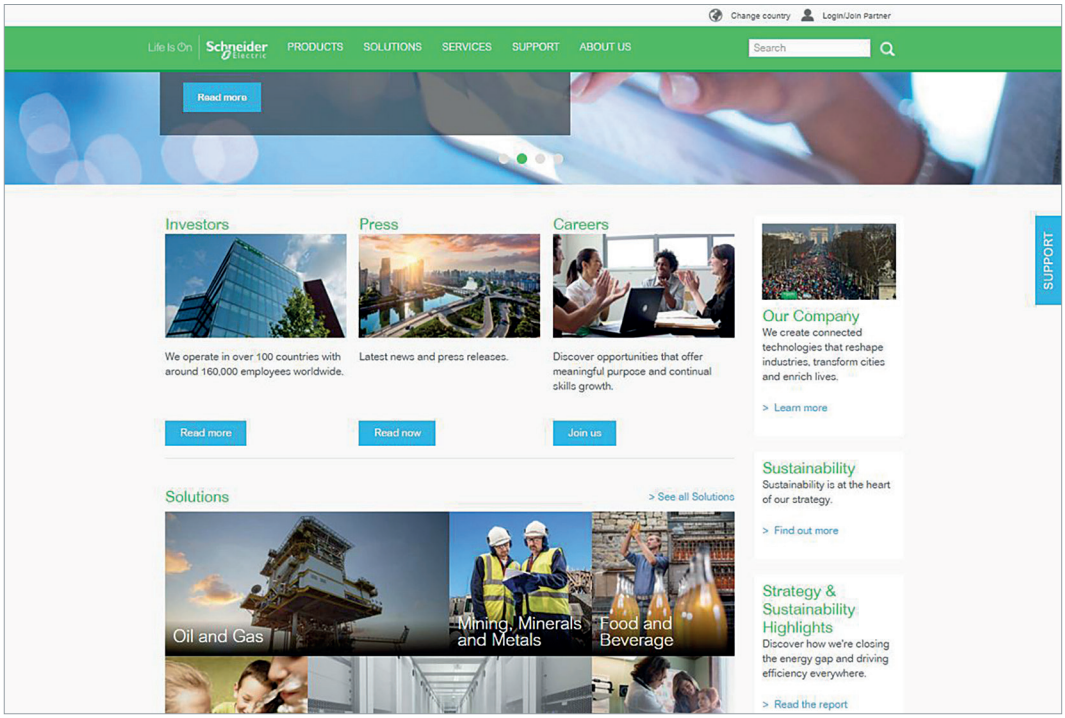

Life Is On | Schneider Electric

Green Premium™ ecolabel product - Sustainable performance, by design

Schneider Electric Industries SAS
35, rue Joseph Monier - CS 30323
F92506 Rueil-Malmaison Cedex

AMTED397052EN - 28nd June 2022